LIVARNO

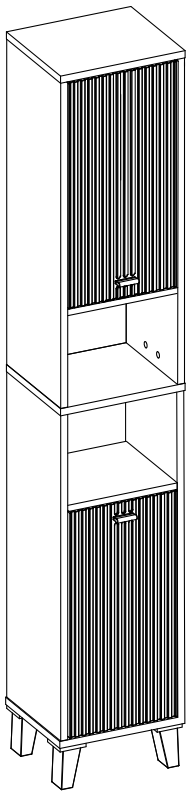

PDF ONLINE
www.lidl-service.com

Nr. Art. 5002917

IE **Tall cabinet unit**
NI Assembly instruction

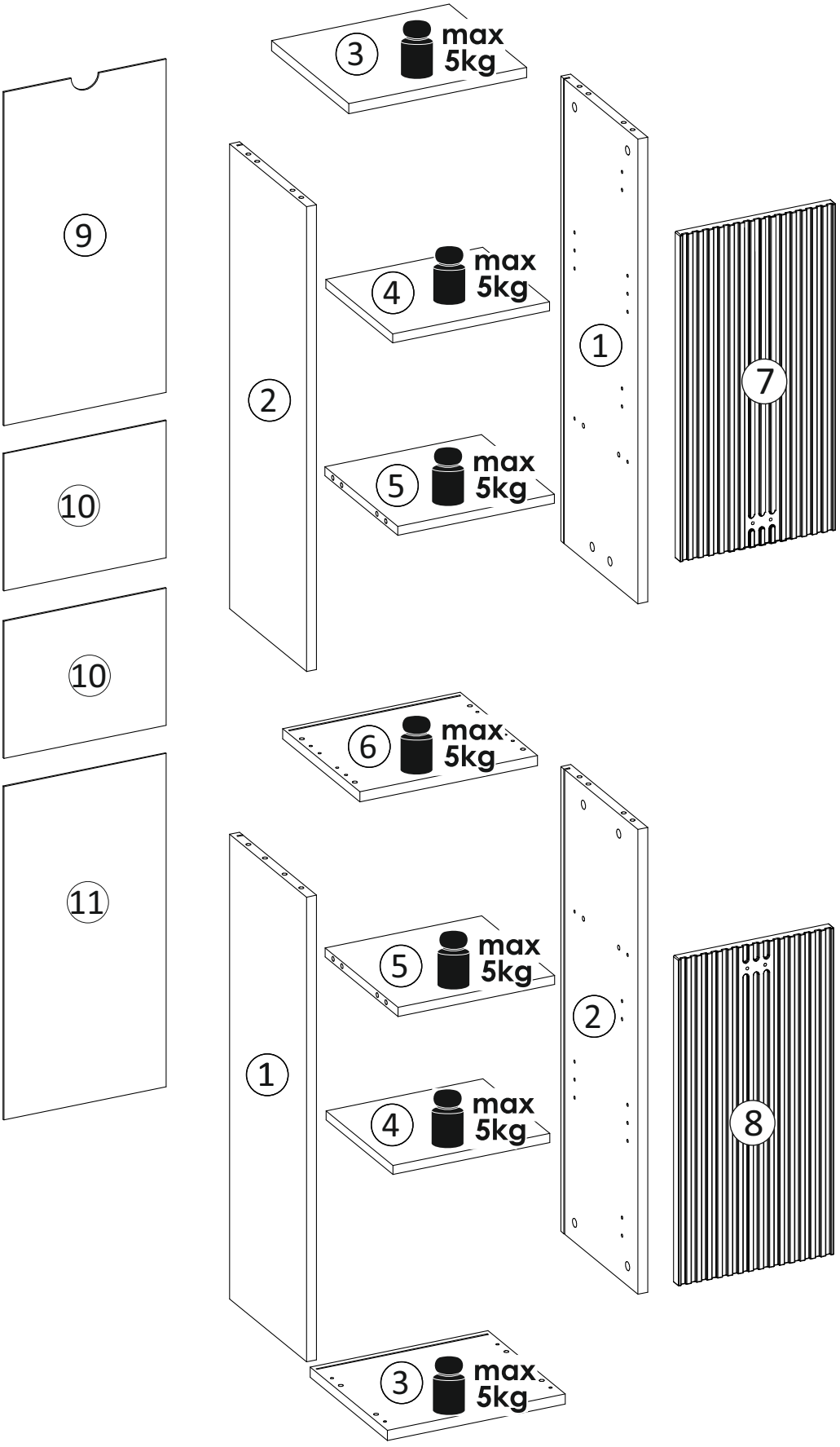
3
max 5kg
9
4
max 5kg
2
1
7
10
5
max 5kg
10
6
max 5kg
11
1
5
max 5kg
2
4
max 5kg
8
3
max 5kg

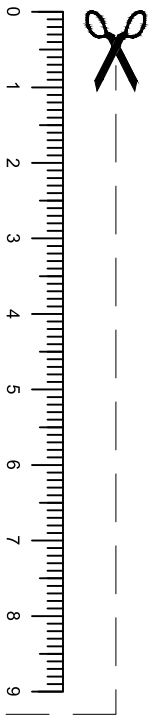

Sie benötigen:	Du behöver:	Aveþi nevoie de:
Vous avez besoin de:	Tarvitset:	На Вас са
Le servono:	Szükséges eszközök:	Ви нужни:
You need:	Necessita de:	χρειάζεστε:
U hebt nodig:	Necesita:	Kas Jums
Potrebujete:	Du skal bruge:	Nepieciešams:
Jums reikės:	Trebate:	Te vajate:
Potrzebne są:	Potrebno vam je:	Potřebujete:

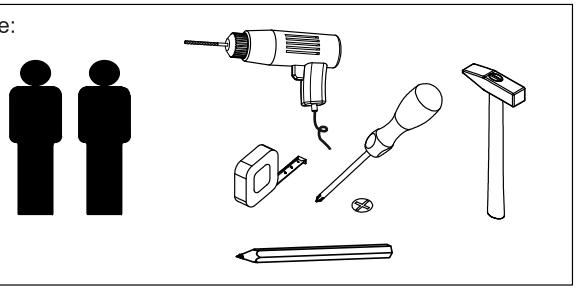

Beschläge / Ferrures pour meubles / Guarnizioni / Fittings / Helat / Beslag / Hang- en sluitwerk / Okucia / Kování / Vasalások / Okovje / Kovanie / Herrajes / обков / Guarnições / Beslag / Obloge / Ελάσματα / Kinnitused / Apšuvumi / Apkaustai /

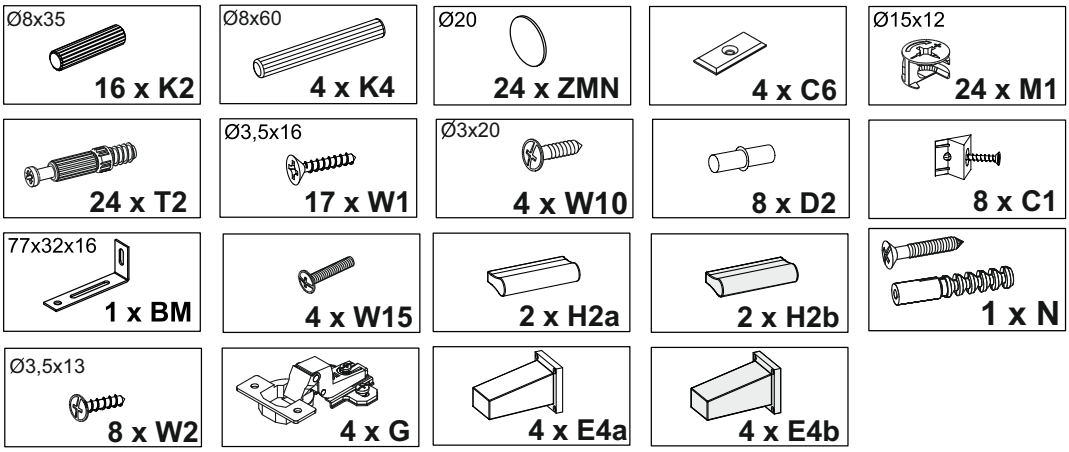

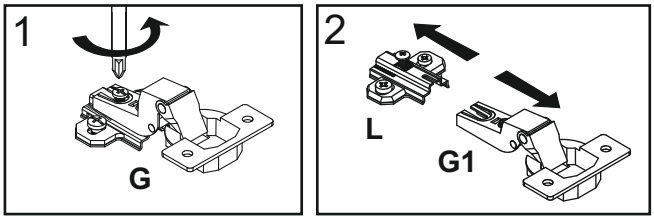

Teile / Pièces / Pezzi / Article/ Onderdelen/ Części / Diely / Díly / Osat / Delar / Alkatrészek / Dele / Piezas / Peças / Dijelovi / Piese / части / Εξαρτήματα / Dalys / Detaļas / Osad / Delovi /

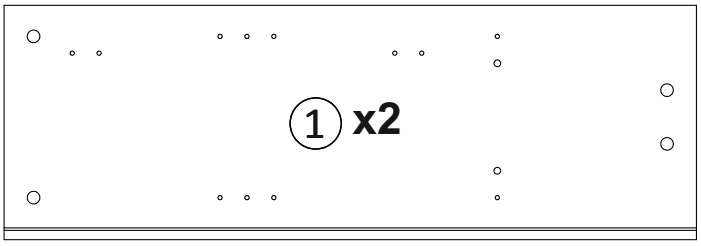

Teile / Pièces / Pezzi / Article/ Onderdelen/ Części / Diely / Díly / Osat / Delar / Alkatrészek / Dele / Piezas / Peças / Dijelovi / Piese / части / Εξαρτήματα / Dalys / Detaļas / Osad / Delovi /

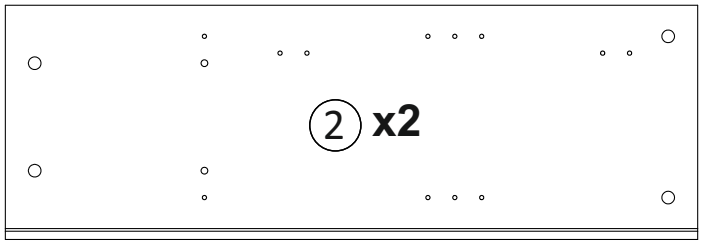

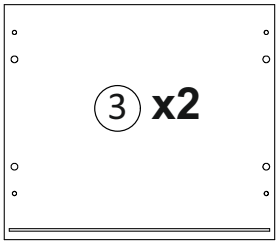

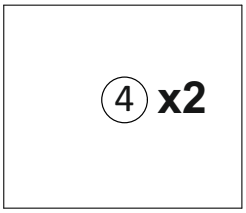

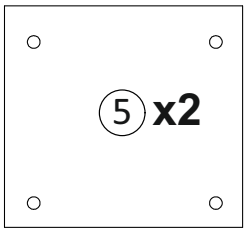

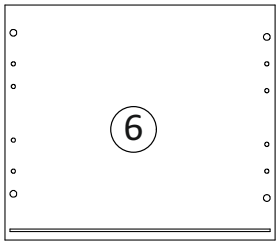

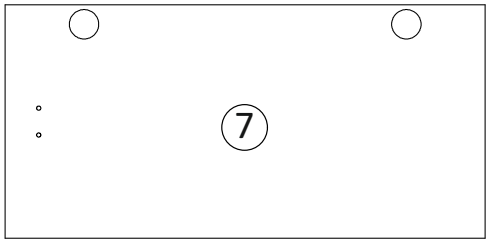

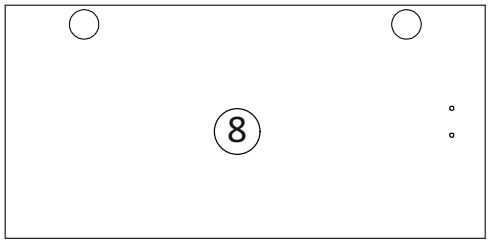

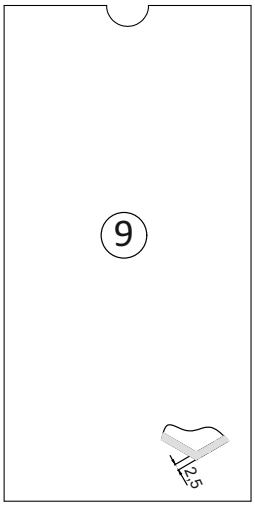

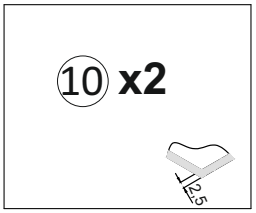

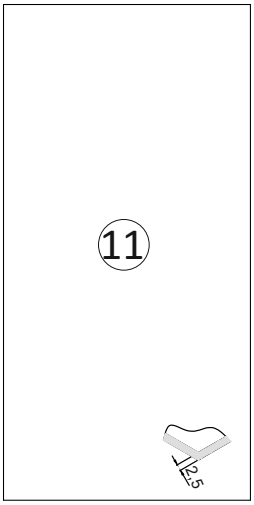

IE NI

Intended use

This product is intended solely for private use and not for commercial purposes. The warranty shall be deemed void in cases of misuse or improper handling, use of force and modifications / repairs which have not been carried out by one of our authorised Service centres.

Safety instructions

Warning: Please follow directly the manufacturer assembly instruction. Deficient assembly causes safety risks. Please check if the surface is appropriate and choose appropriate fasteners. Assembling by qualified personnel is recommended.
Warning! Furniture consists small parts.
Warning! Children under 3 years shall not be unattended.

Wall fixing /ANTI-TOPPLE WARNING

This product has to be permanently fixed to the wall with the bracket(s) included, to avoid fatal injury in case it topples over. In case of connective devices for the wall mounting, the supporting material must be checked for suitability.

Care instructions

Please do only clean with a duster or a damp cloth.
Do not use any scouring agents!

A

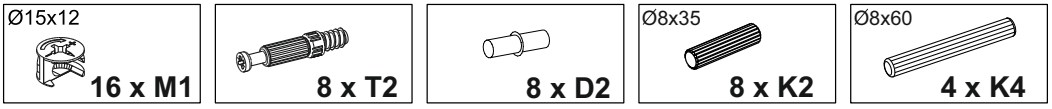
Ø15x12
16 x M1
8 x T2
8 x D2
Ø8x35
8 x K2
Ø8x60
4 x K4

!!!

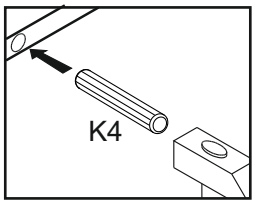
K4

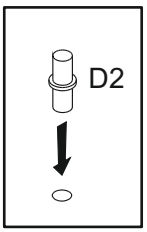
D2

M1
M1
T2
T2
D2
D2
2
x2
M1
M1
K2
K2

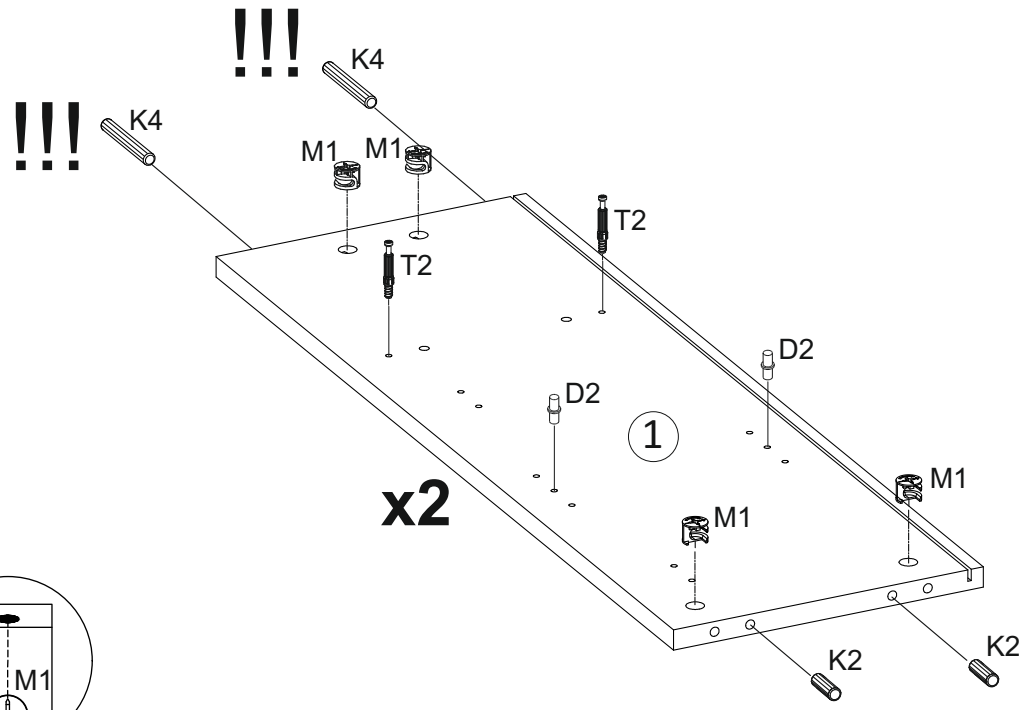
!!!
K4
!!!
K4
M1
M1
T2
T2
D2
D2
1
x2
M1
M1
K2
K2

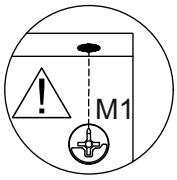
M1

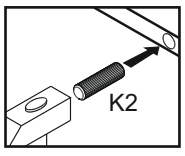
K2

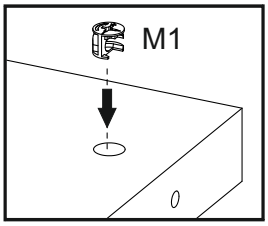
M1

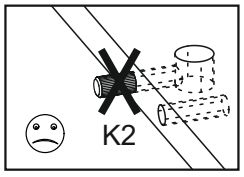
K2

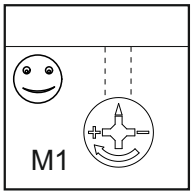
M1

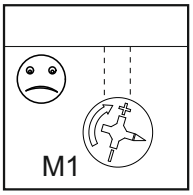
M1

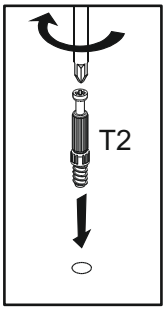
T2

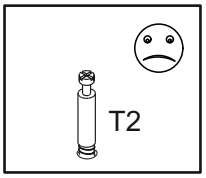
T2

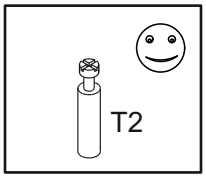
T2

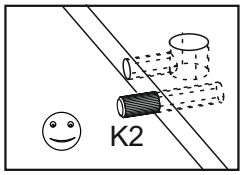
K2

B

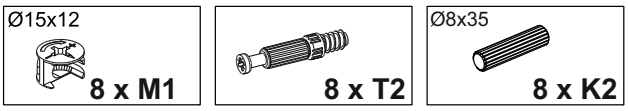
Ø15x12
8 x M1
8 x T2
Ø8x35
8 x K2

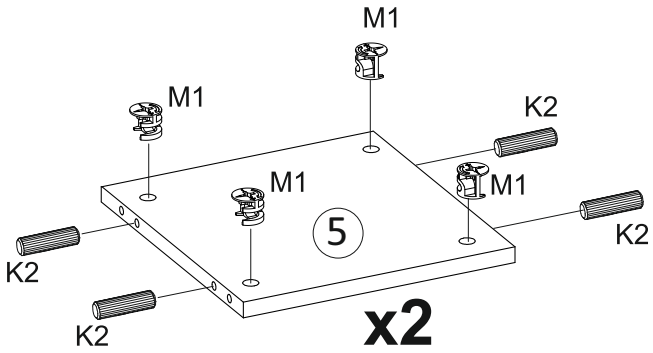
M1
M1
K2
M1
M1
5
K2
K2
K2
x2

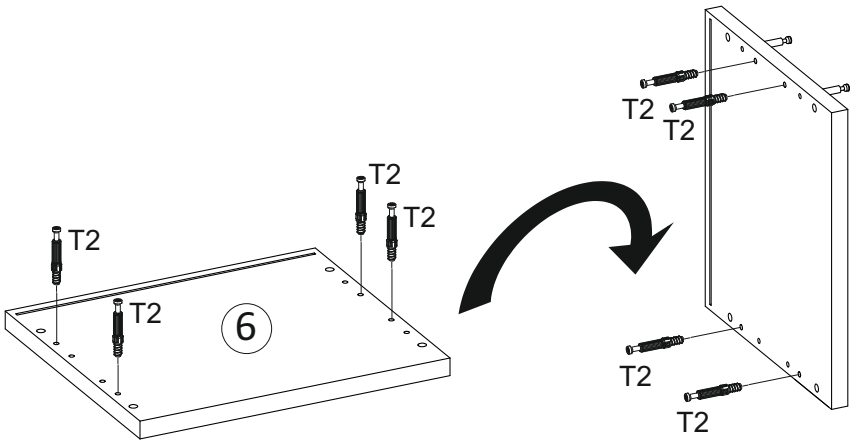
T2
T2
T2
T2
T2
6
T2
T2
T2
T2

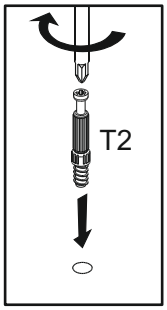
T2

C

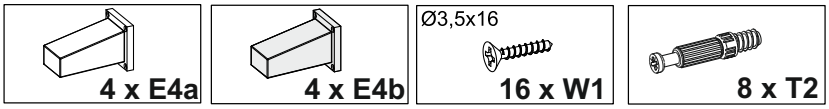
4 x E4a
4 x E4b
Ø3,5x16
16 x W1
8 x T2

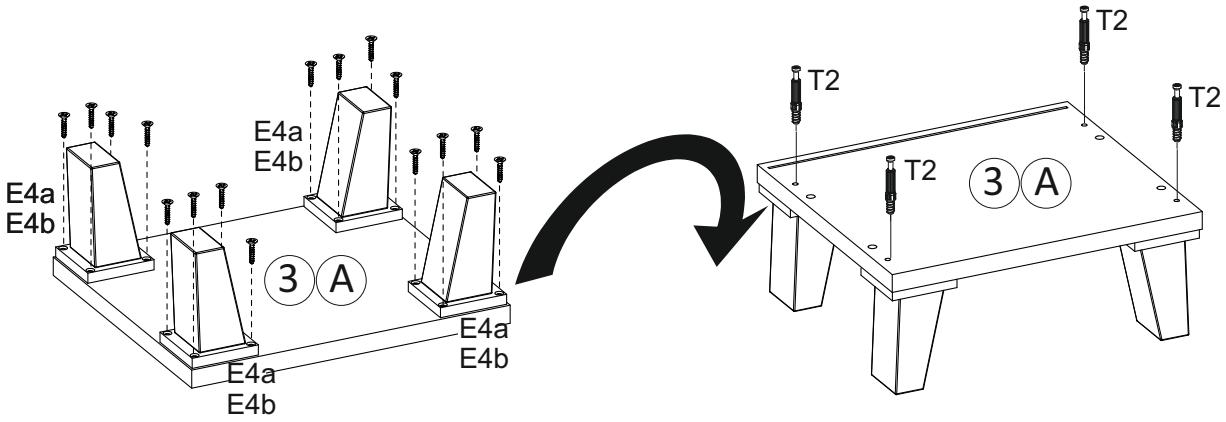
E4a
E4b
E4a
E4b
3
A
E4a
E4b
E4a
E4b
T2
T2
T2
T2
3
A

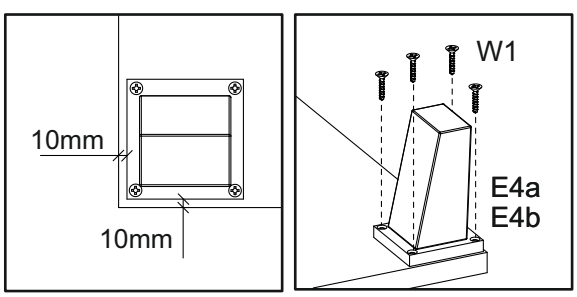
10mm
10mm
W1
E4a
E4b

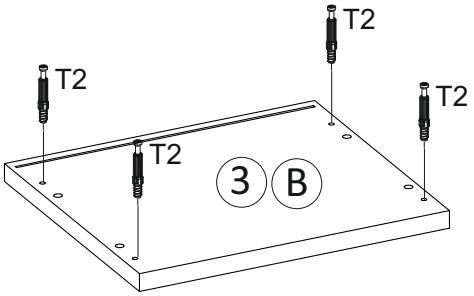
T2
T2
T2
T2
3
B

D

Ø20

4 x ZMN

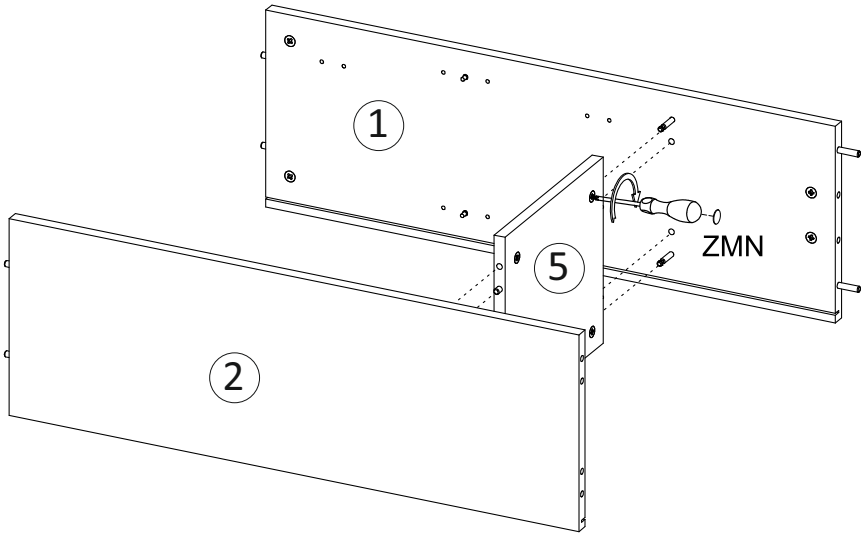

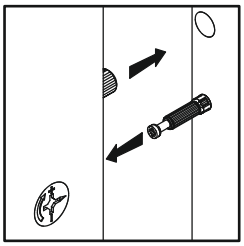

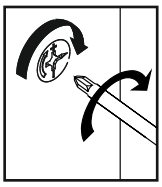



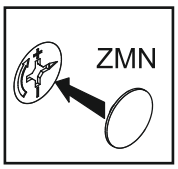

E

Ø20

4 x ZMN

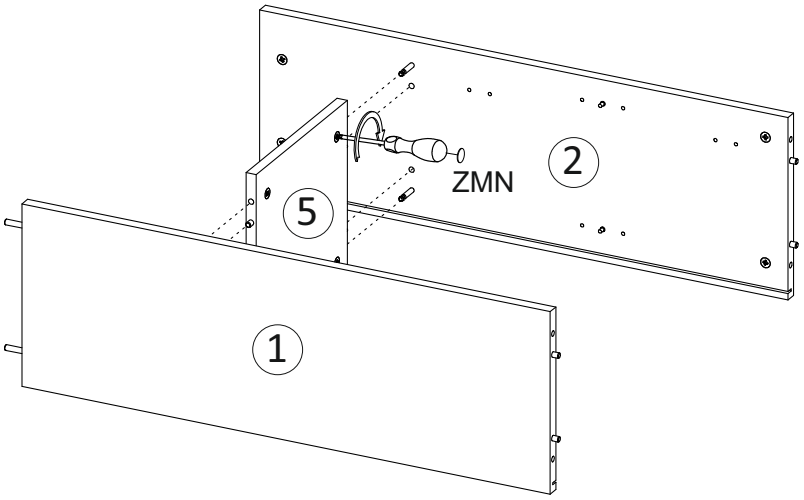

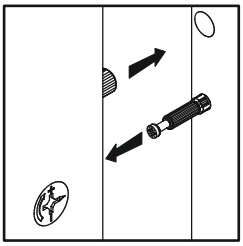

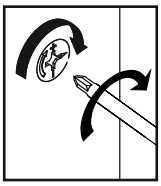

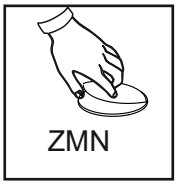

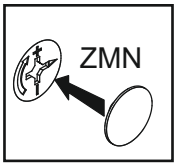

F

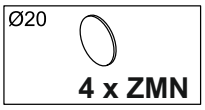

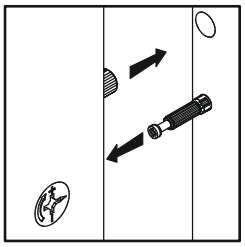

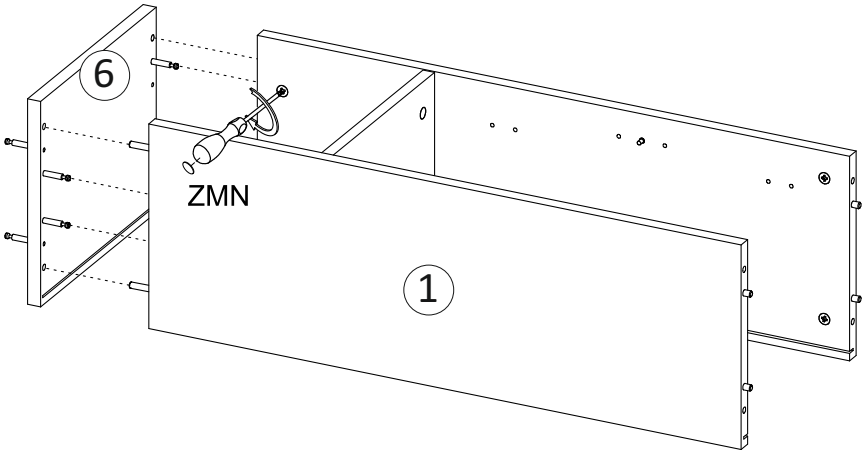

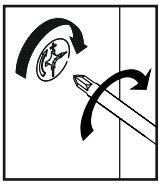

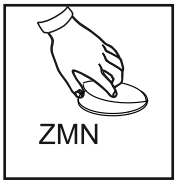

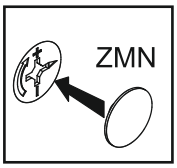

G

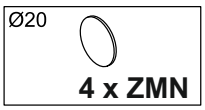

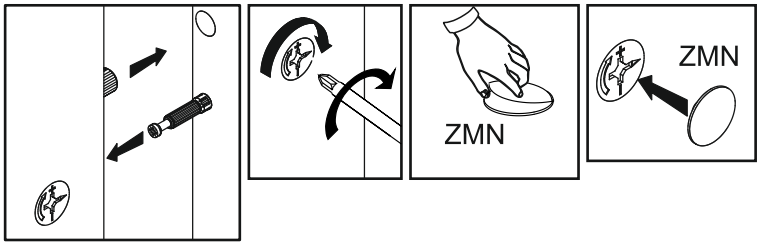

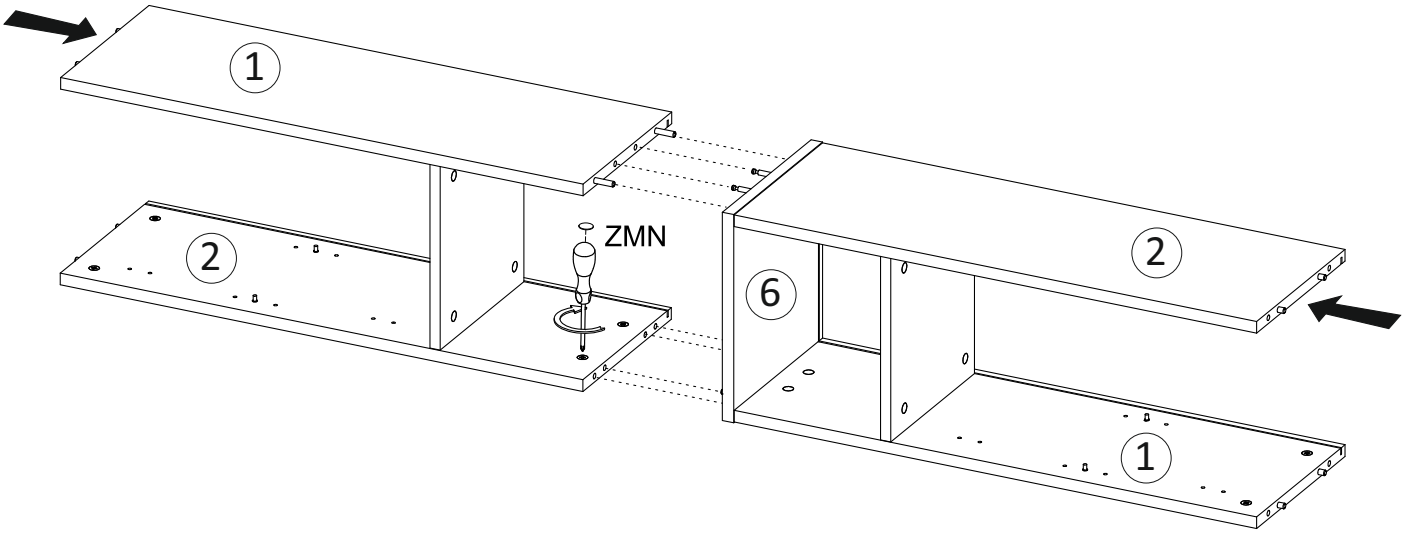

H

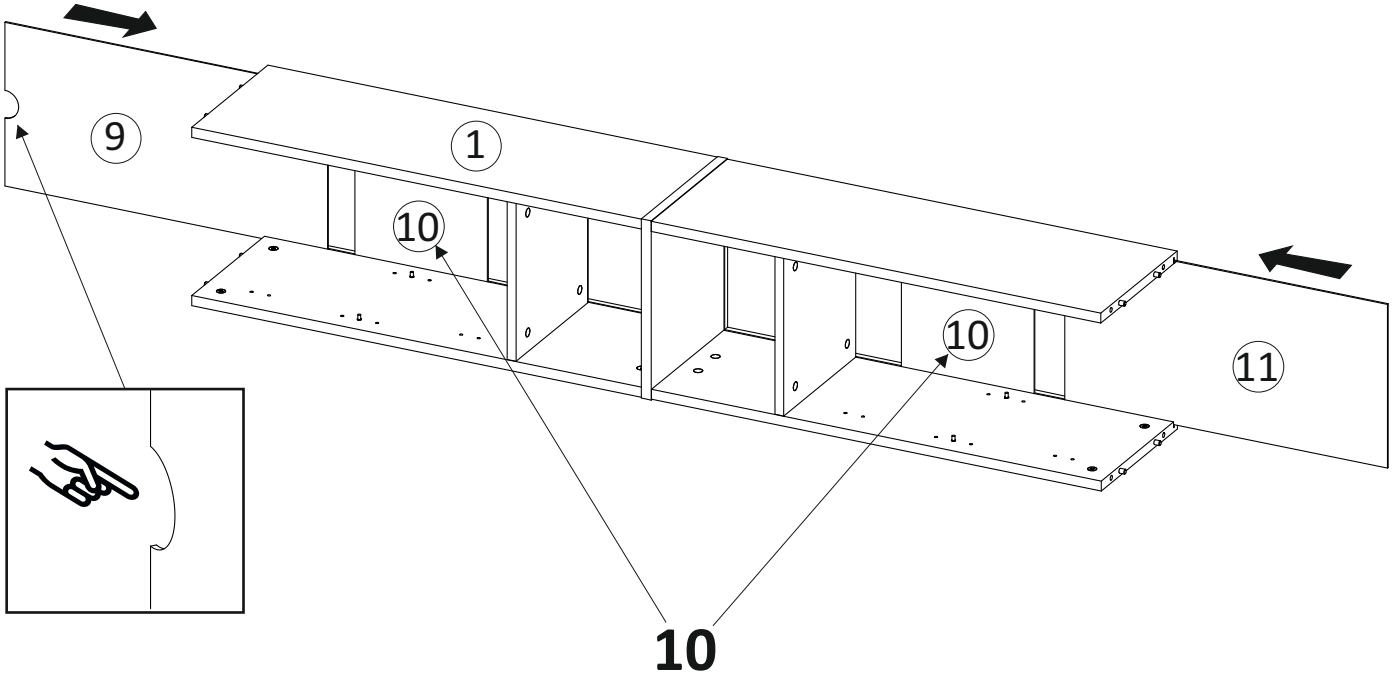

H

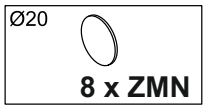

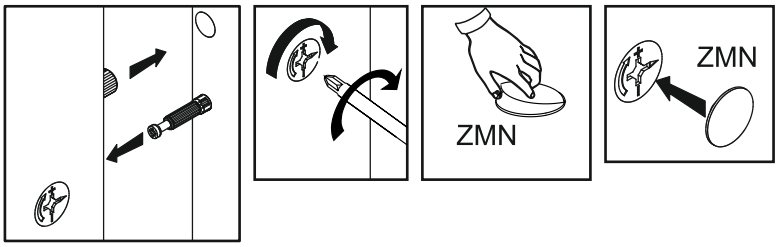

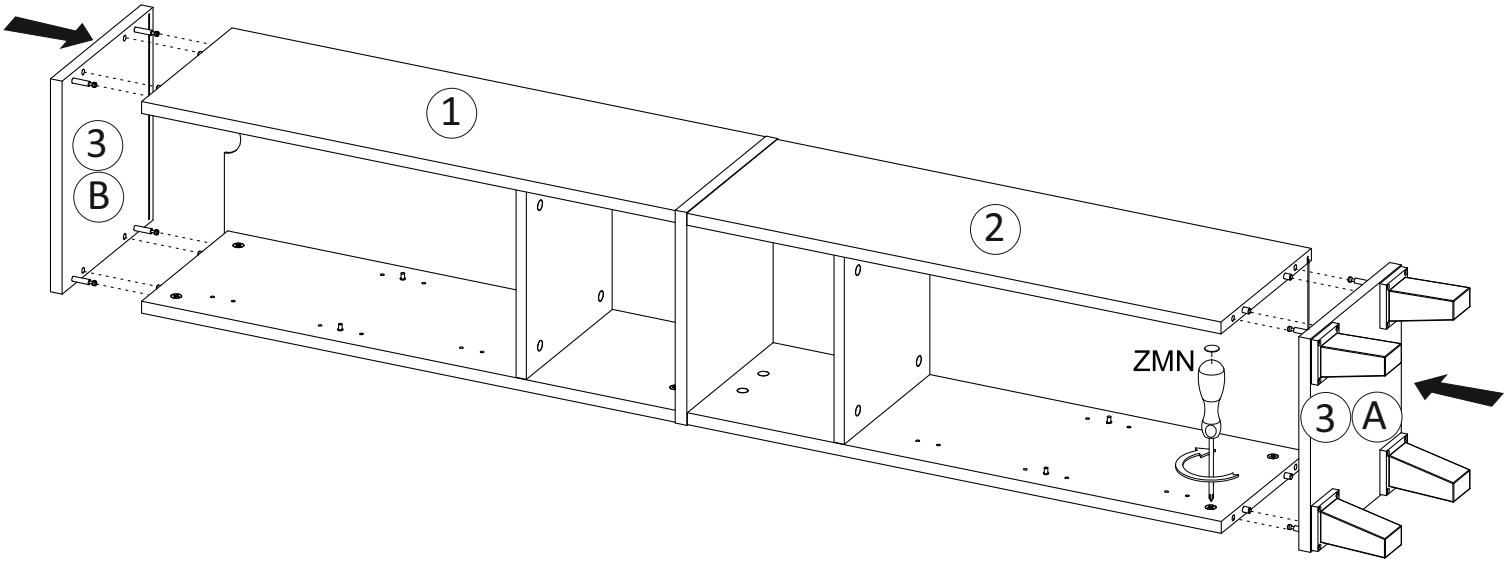

J

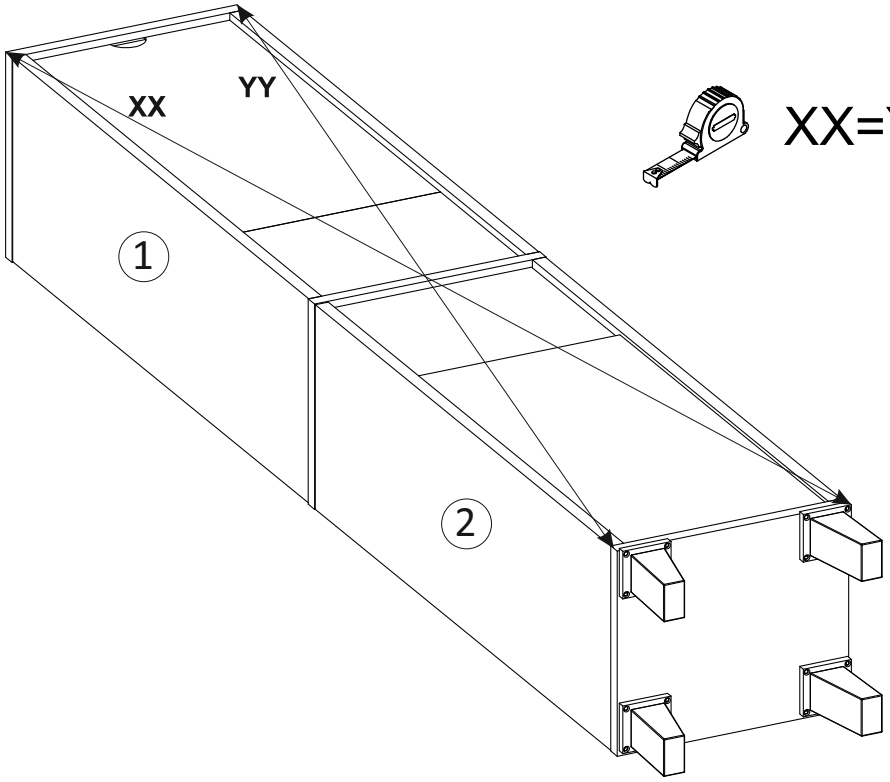

XX=YY≡90°

K

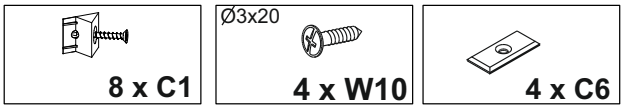

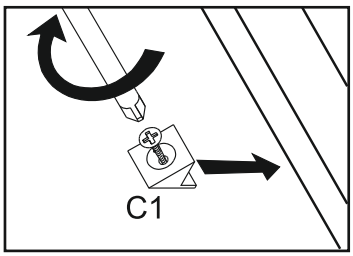

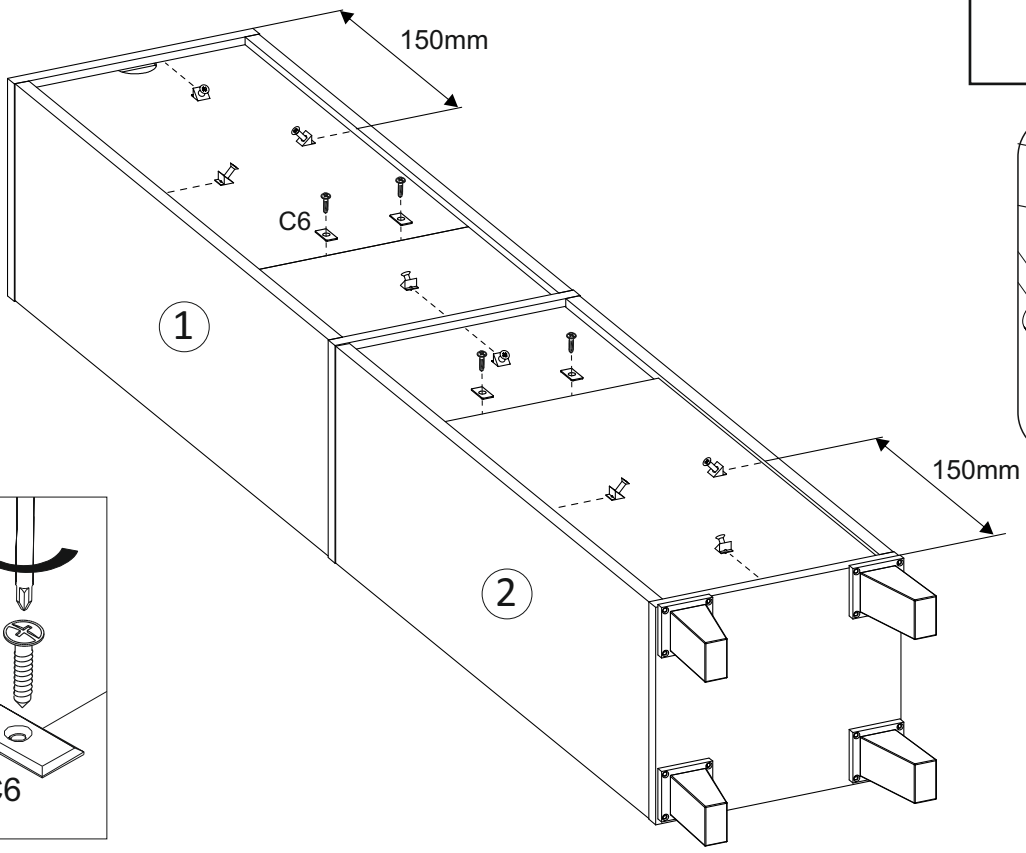

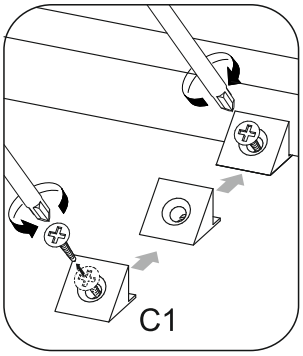

L

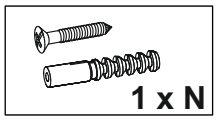

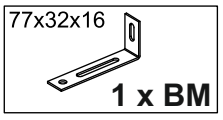

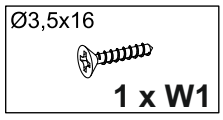

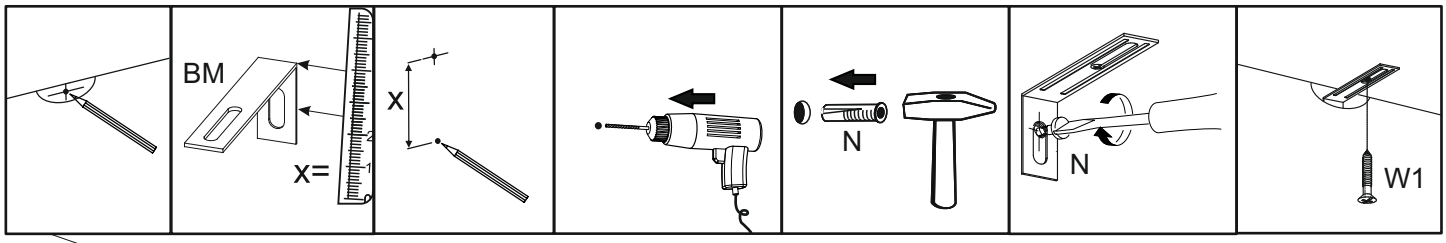

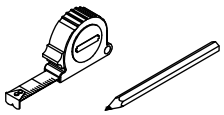

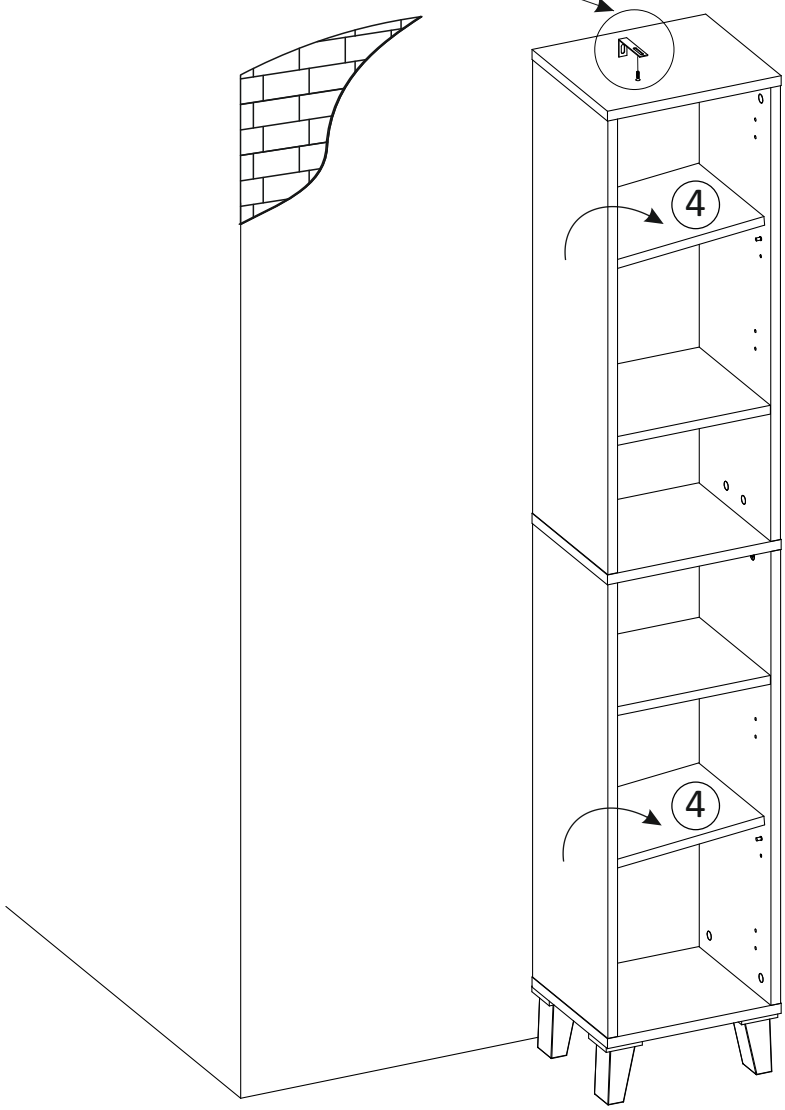

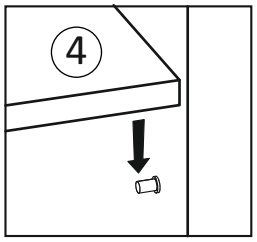

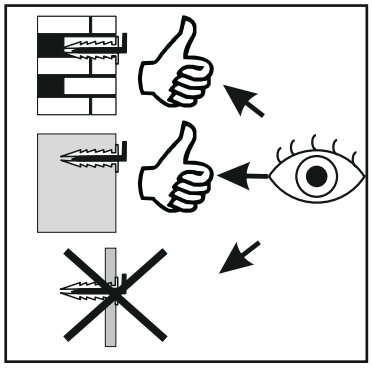

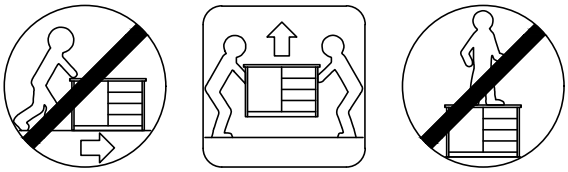

M

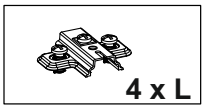

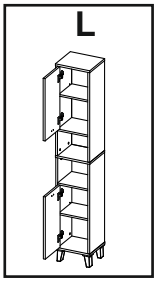

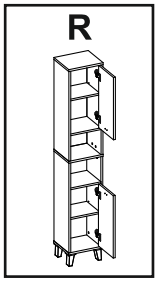

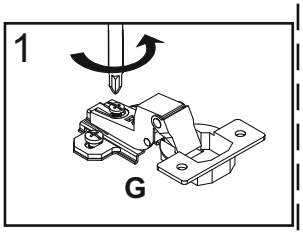

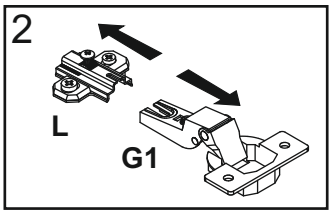

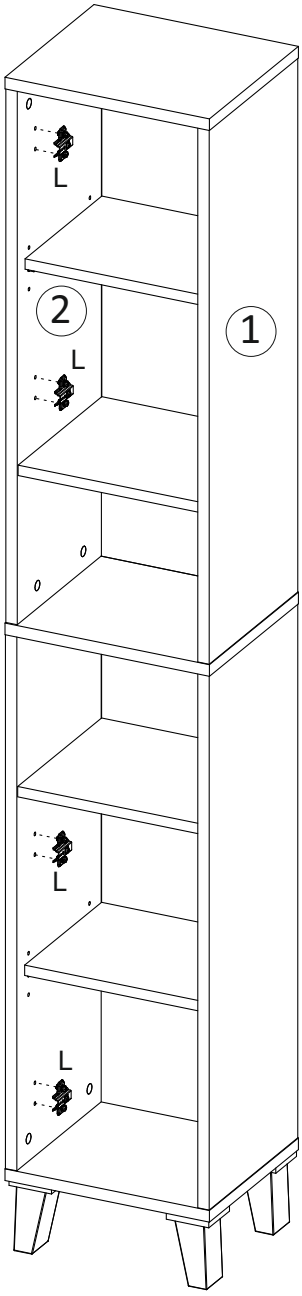

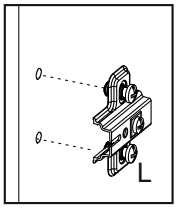

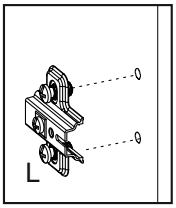

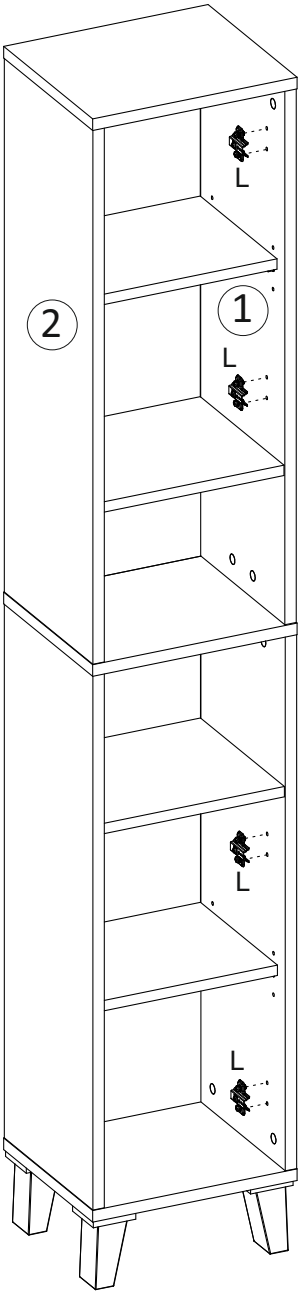

N

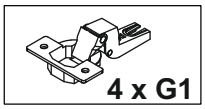

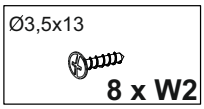

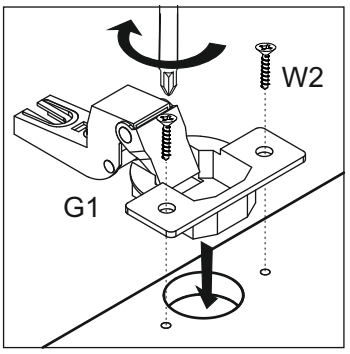

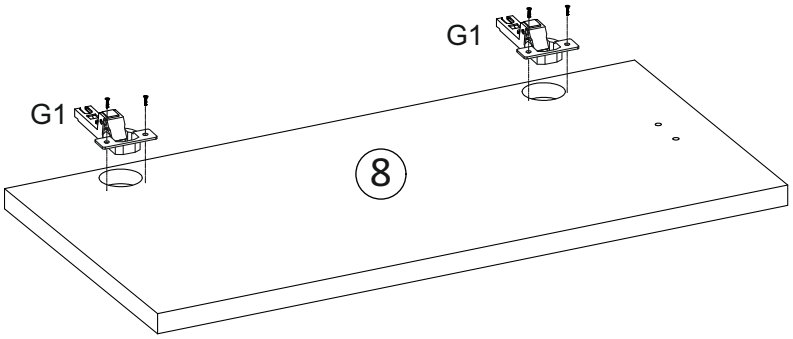

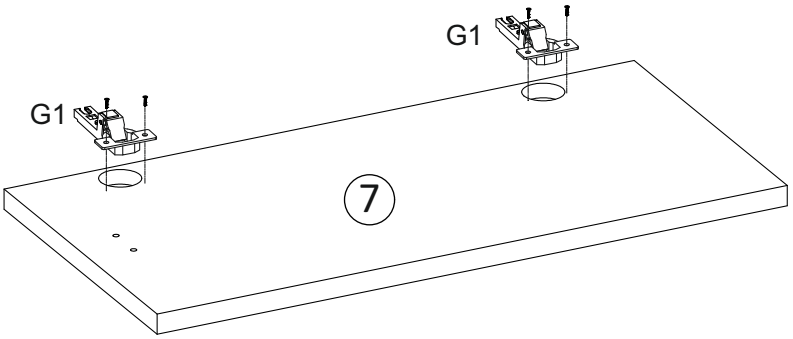

O

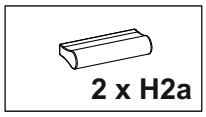
2 x H2a

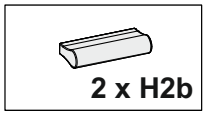
2 x H2b

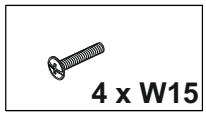
4 x W15

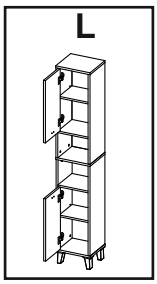
L

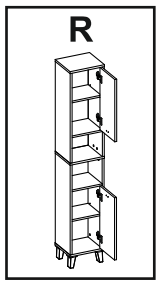
R

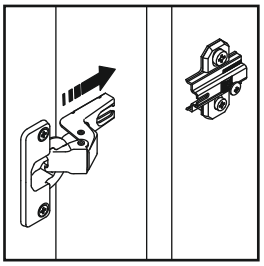

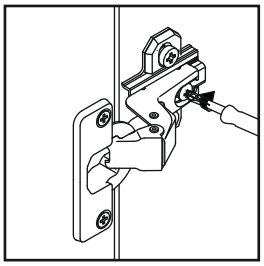

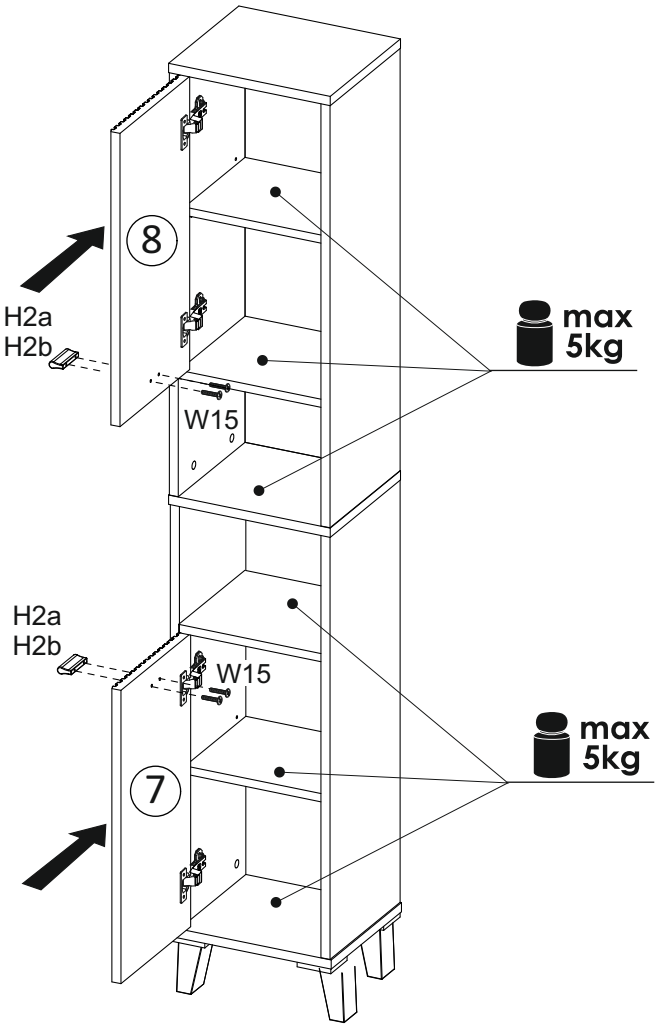
8
H2a
H2b
W15
max
5kg
H2a
H2b
W15
max
5kg
7

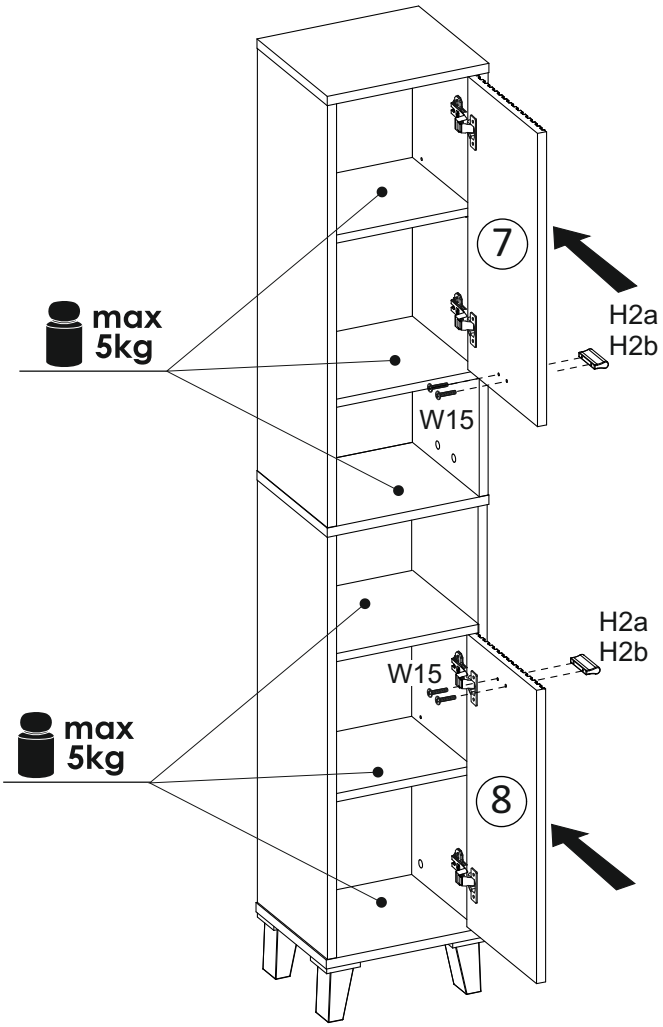
7
H2a
H2b
W15
max
5kg
H2a
H2b
W15
max
5kg
8

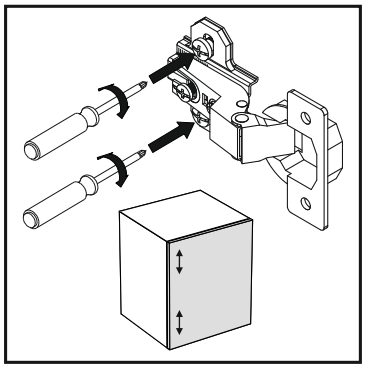

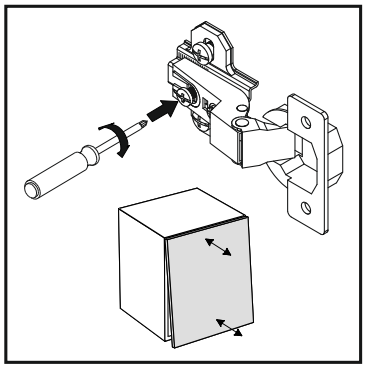

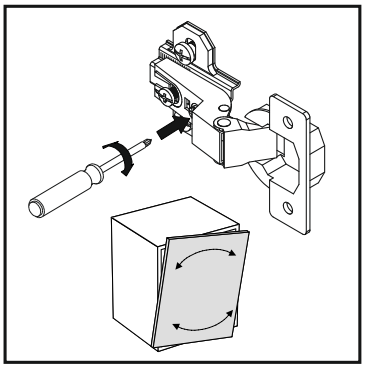

IE NI

Warranty from Intermeble Sp. z o.o.

Dear customer, this appliance comes with a 3-year warranty valid from the date of purchase. In the event that this product has any defects, you, the buyer, have certain statutory rights. Your statutory rights are not limited in any way by the warranty described below.

Warranty conditions

The warranty period starts on the date of purchase. Please keep your receipt in a safe place. This will be required as proof of purchase. If any material or manufacturing fault occurs within 3 years of the product's date of purchase, we will either repair or replace the product for you or refund the purchase price (at our discretion). This warranty service requires that you present the defective appliance and the proof of purchase (receipt) within the 3-year warranty period, together with a brief written description of the fault and of when it occurred. If the defect is covered by the warranty, your product will either be repaired or replaced by us. The repair or replacement of a product does not signify the beginning of a new warranty period.

Warranty period and statutory claims for defects

The warranty period is not prolonged by repairs effected under the warranty. This also applies to replaced and repaired components. Any damage and defects present at the time of purchase must be reported immediately after unpacking. Repairs carried out after expiry of the warranty period shall be subject to a fee.

Scope of the warranty

This appliance has been manufactured in accordance with strict quality guidelines and inspected meticulously prior to delivery. The warranty covers material faults or production faults. The warranty does not extend to product parts subject to normal wear and tear or to fragile parts which could be considered as consumable parts such as switches or parts made of glass. The warranty does not apply if the product has been damaged, improperly used or improperly maintained. The directions in the operating instructions for the product regarding proper use of the product are to be strictly followed. Uses and actions that are discouraged in the operating instructions or which are warned against must be avoided

Disposal

Please dispose packaging and product after use in an environmentally sound manner.

Warranty claim procedure

To ensure your claim is processed quickly, please have your proof of purchase and item number ready (e.g. IAN 515938_2510). You will find the item number on the product label, on the first page of themanual (bottom left) or on a sticker on the back or underneath the furniture.

INTERMEBLE Sp. z o.o.
Sompolinek 18,
62-610 Sompolno
POLAND

@ reklamacje@intermeble.com.pl
☎ 0048 63 262 33 77

INTERMEBLE Sp. z o.o.
Sompolinek 18,
62-610 Sompolno
POLAND



Status of information · Stand der Informationen · Version des information · Stand van de informatie · Versione delle informazioni · Estado de las informaciones · Estado das informações:

05/2026

Nr. Art. 5002917